QTech Global Ltd
1a Quillyburn Business Park
Banbridge Road
Dromore
County Down
BT25 1BY

Email sales@qtechspray.com

Phone
UK 01895 276751
ROI 0 1690 3162
International +44 1895 276751

www.**QTech**Spray.com

@**QTech**Spray

USER MANUAL

QTech3.

HVLP Turbine.

SilverPro suction gun

CAUTION
This manual contains important warnings and information
PLEASE READ & KEEP FOR FUTURE REFERENCE

VERSION **HVLP-SILVERPRO-04-0223**

QTech Global Ltd
1a Quillyburn Business Park, Banbridge Road, Dromore, County Down BT25 1BY

Declares that the
QTech3 HVLP Turbine
is in conformity with
EN 60335-1
according to
73/23/EEC Low Voltage Directive

CONTENTS

Please read these instructions carefully before using the equipment

EARTHING

This appliance must be earthed. If it should malfunction or break down, earthing provides a path of least resistance for electric current to reduce the risk of electric shock. This appliance is equipped with a cord having an equipment-earthing conductor and earthed plug. The plug must be inserted into an appropriate outlet that is properly installed and earthed in accordance with all local codes and legislation.

ELECTRIC SHOCK HAZARD

Improper connection of the equipment grounding conductor can result in the risk of electric shock.

- Check with a qualified electrician or service person if you are in doubt as to whether the outlet is properly grounded.
- Use only a 3-wire extension cord that has a 3-blade earthing plug and a 3-slot receptacle that accepts the plug on the product.
- An undersized cord results in a drop in line voltage and loss of power and overheating.
- Do not modify the plug provided with the appliance. If it will not fit the outlet, have a proper outlet installed by a qualified electrician.
- To reduce the risk of electric shock or injury, do not expose to rain.
- Never allow unit to freeze.
- Always store the unit inside in a dry location. Store on the floor if in a basement setting.
- The operator must wear shoes and the floor must not be wet.

FIRE & EXPLOSION HAZARD

This QTech HVLP Turbine must not be used in an area contaminated by volatile or flammable materials since sparking can be expected in the normal operation of the motor. This could ignite the contaminants causing a dangerous explosion.

- Do not spray flammable or combustible materials near an open flame or sources of ignition such as cigarettes, motors, and electrical equipment.
- Keep spray area well-ventilated. Keep a good supply of fresh air moving through the area. Keep turbine in a well ventilated area.
- Do not spray turbine.
- Turn off and disconnect power cord before servicing equipment.
- Do not smoke in the spray area.
- Do not operate light switches, engines, or similar spark producing products in the spray area.
- Keep area clean and free of paint or solvent containers, rags, and other flammable materials.
- Fire extinguisher equipment shall be present and working.
- Sprayer generates sparks. When flammable liquid is used in or near the sprayer or for flushing or cleaning, keep sprayer at least 6 m away from explosive vapours or spraying area.
- Ensure ground prongs are intact on sprayer and extension cords.
- Always disconnect unit from main supply when filling the paint container.
- Never use 1,1,1-trichloroethane, methylene chloride, other halogenated hydrocarbon solvents or fluids containing such solvents in equipment with aluminum wetted parts. Such use could result in a serious chemical reaction, with the possibility of explosion. Consult your fluid suppliers to ensure that the fluids being used are compatible with aluminum parts.

TOXIC FLUID OR FUMES HAZARD

Toxic fluids or fumes can cause serious injury or death if splashed in the eyes or on skin, inhaled, or swallowed.

- Read MSDS (Material Safety Data Sheet) to know the specific hazards of the fluids you are using.
- Always wear appropriate gloves and eye protection
- Always wear a respirator or mask. Read all instructions of the respirator or mask to ensure that it will provide the necessary protection against the inhalation of harmful vapors. Please also check with the local jurisdiction.
- Paint, solvents, insecticides and other materials may be harmful if inhaled.
- Store hazardous fluid in approved containers, and dispose of it according to applicable guideline.
- Do not stop or deflect fluid leaks with your hand or body.

EQUIPMENT MISUSE HAZARD

Misuse of equipment can cause serious injury or death.

- Never aim the spray gun at another person or animal. In the event of injury, seek expert medical advice immediately.
- Do not operate or spray near children.
  Keep children away from equipment at all times.
- Do not overreach or stand on an unstable support.
  Keep effective footing and balance at all times.
- Stay alert and watch what you are doing.
- Do not operate the unit when fatigued or under the influence of drugs or alcohol.
- Do not kink or over-bend the hose.
- Do not use the hose as a strength member to pull or lift the equipment.
- Do not cover turbine case as this will restrict air to the intake and result in overheating and premature failure of the motor.
- Do not carry turbine while spraying.
- Check the hose, hose connectors and power cord daily.
  Any worn or damaged parts should be replaced immediately.
- Use only genuine QTech replacement parts.
- It is normal for the turbine air outlet (manifold) to become hot during use. Please allow your QTech3 HVLP Turbine to cool for a few minutes before removing the hose from the turbine manifold.

GETTING STARTED

NOTE

Throughout this manual we have used the generic word 'Paint' to describe all and any coatings. Please substitute the word 'Paint' for whatever finish or coating you are spraying.

Your QTech HVLP Gun has been adjusted at the factory and is ready for spraying. To clean out any impurities that may have accumulated during assembly or shipping, we recommend spraying a small quantity of clean paint thinner through the gun. Before tackling any serious spraying, experiment with the gun on a scrap piece of wood until you become familiar with all the controls.

HOSE CONNECTION

Connect the hex nut at the end of the hose (female connector) to the turbine air outlet. **Tighten this nut lightly. Overturning could cause the internal manifold to rotate and break the internal seal to the motor.** A Male Quick Connect Coupling 10-2010 is available as an accessory for the connection to the turbine.

AIR CONTROL VALVE

The Air Control Valve 10-2003 is located on the hose next to the brass quick-connect. It provides you with a means of controlling the air flow through the gun. It offers fingertip control when needed to reduce bounce back and overspray. It is important to remember that the air control valve - is the 'last in the chain' of operations after:

1. Thinning the paint
2. Adjusting the shape and size of the spray pattern
3. Adjusting the flow of paint through the gun

After performing these operations, you should spray a few passes onto a scrap piece of plywood or cardboard. This will allow you to determine if the paint levels nicely. Once the Gun is producing a perfect finish with full air, you may then experiment with turning the air down until bounce back is reduced to a minimum. However, if orange-peel results, you have no option but to turn the air up again a slight amount.

PLASTIC DIAPHRAGM

The 1 litre pressurised suction cup has a Plastic Diaphragm QTG-31-1.This diaphragm prevents paint from entering the Pressure Tube QTG-33. The small air hole in the diaphragm should not be placed directly below the air hole in the nipple. Position the diaphragm hole to the rear of the cup. The spray gun can be turned to different angles when spraying but never beyond horizontal.

CHANGING THE SHAPE OF THE FAN

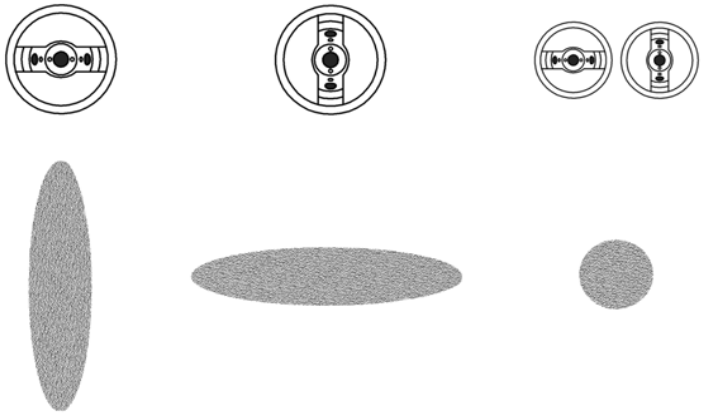

1. Loosen the Air Cap Retaining Ring QTG-1-1. Turn the Air Cap to the horizontal position then re-tighten the collar to lock it into place. This setting produces a vertical spray pattern. This pattern is used more than any other by experienced spray painters.
2. Setting the air cap in a vertical position produces a horizontal spray pattern. To lock it in position, tighten the collar. The horizontal fan pattern is the most useful for painting vertically such as a doorframe.

CHANGING THE SIZE OF THE FAN

To produce a smaller fan pattern, turn the Pattern Control Knob counter clockwise. Because the spray pattern size is now much smaller, **you must turn down the amount of paint** spraying through the nozzle at the Fluid Adjusting Knob QTG-20 (rear of gun). If you do not do this, you will get runs.

To set the fluid output, simply turn the fluid adjusting knob counter-clockwise for more 'paint' and clockwise for less. Once you set the fluid to your liking, you can leave it in this position - unless of course, you change the size of the fan pattern.

For the very smallest pattern (less than 1"), you must move the gun closer to the workpiece - but don't forget to reduce the amount of paint at the fluid adjusting knob.

SPRAYING TECHNIQUES

The spray gun should be held perpendicular to the surface at all times. HOLD THE GUN NO MORE THAN 8" (20cm) AWAY FROM THE SURFACE TO BE PAINTED.

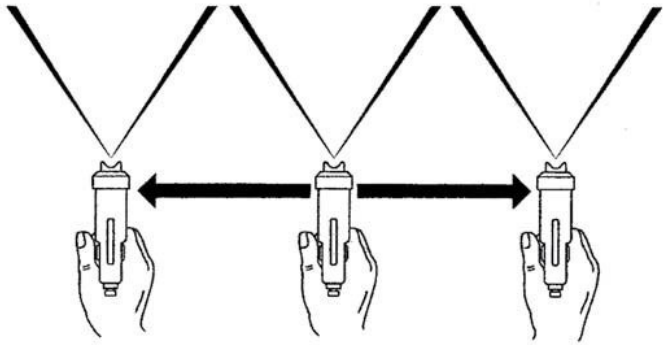

CORRECT METHOD

Start off the piece. Pull the trigger and move the spray gun in the direction you want to spray. Continue off the edge of the piece on the other end before releasing the trigger. Between each successive pass, overlap by about a half.

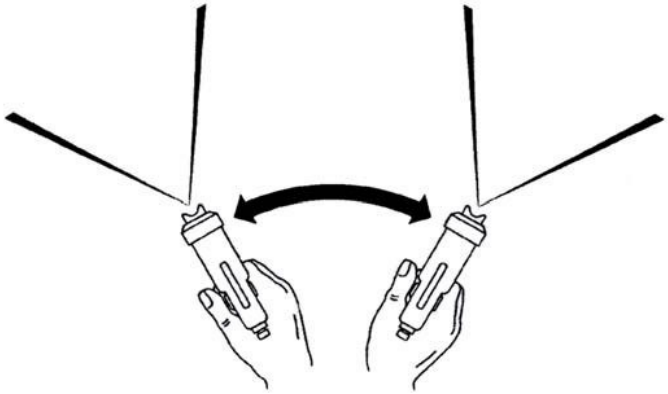

INCORRECT METHOD

CAUTION | Never, for any reason, point the spray gun directly at the face, or head of a person.

AIR CAP SET SELECTION

Six additional size setups are available as accessories.
Size **1.8mm** is standard with the QTech SilverPro gun.
1.0mm, 1.3mm or 1.5mm can be used for any type of fine-finishing application.
The larger sizes such as 2.0mm allow for more fluid output - desirable with fast drying lacquers.

AIR CAP SETS

Product code **QTG-1-08** 0.8mm (.031")
SUPER-FINE OUTPUT SHADING, STAINS.

Product code **QTG-1-10** 1.0mm (.039")
FINE OUTPUT SHADING, STAINS, WATERBORNE COATINGS.

Product code **QTG-1-13** 1.3mm (.051")
FINE - MEDIUM OUTPUT -STANDARD WATER-BASED LACQUERS, ACRYLICS, POLYURETHANE, STAINS.

Product code **QTG-1-15** 1.5mm (.059")
MEDIUM OUTPUT Similar to No. 3 but more coverage.
Best for AUTOMOTIVE ENAMELS, LACQUER and LATEX for cabinetry and furniture. Also VARNISHES, PRIMERS, OIL-BASED PAINTS.

Product code **QTG-1-18** 1.8mm (.070")
HIGH OUTPUT Larger surfaces, thick layers, spotted effects.
SEALERS, VARNISH, POLYURETHANE, OIL BASED PAINTS, ENAMELS, EPOXIES, LATEX.

Product code **QTG-1-20** 2.0mm (.078")
EXTRA HIGH OUTPUT Very heavy flows, fast coverage.
STONE FINISH PAINTS, TEXTURE COATING, INDUSTRIAL PRIMERS, MULTI-FLECK PAINTS, LATEX.

Product code **QTG-1-25** 2.5mm (.098")
MAXIMUM HIGH OUTPUT Heavy flows, faster coverage. LATEX.

	Part #	QTG-1-08	QTG-1-10	QTG-1-13	QTG-1-15	QTG-1-18	QTG-1-20	QTG-1-25
	Size	0.8 mm	1.0 mm	1.3 mm	1.5 mm	1.8 mm	2.0 mm	2.5 mm
	Ford#4 Runout Time (seconds)	8 or less	8 - 17	17 - 25	25 - 37	37 - 50	50 - 80	60 or more
	Output	Fine	Fine to medium	Medium	Medium to high	High	High	Extra high
FINE FINISHING	**Dye/ink**	●						
FINE FINISHING	**Shellac/stain**	●	●					
FINE FINISHING	**Sanding sealer**		●	●				
FINE FINISHING	**Clear lacquer**		●	●				
FINE FINISHING	**Varnish**		●	●				
FINE FINISHING	**Polyurethane**		●	●	●			
FINE FINISHING	**Pigmented**				●	●		
AUTOMOTIVE	**Clear**		●					
AUTOMOTIVE	**Base**			●				
AUTOMOTIVE	**Primer**				●	●		
AUTOMOTIVE	**Flake additive**					●	●	●
OTHER	**Bathtub coatings**		●	●				
OTHER	**Oil based primer**				●	●		
OTHER	**Oil based paints**				●	●		
OTHER	**Water based primers**					●	●	
OTHER	**Water based paints**					●	●	
OTHER	**Multi-fleck finishes**					●	●	●

VISCOSITY GUIDE

A Viscosity Cup (Ford #4 Standard) is included with your QTech system. To test the viscosity of the paint material, fill the viscosity cup to the brim and time how long it takes for the liquid to empty out through the hole. We recommend you experiment to find the ideal viscosity for your application and record the information for the next time.

Always check with the manufacturer of the coating for assistance in thinning for spraying. If their product is only designed to be brushed, they may not be too helpful. But remember that any type of coating can be sprayed if it is thinned correctly (with the appropriate solvent) and you have installed the ideal aircap set.

The chart below illustrates how many SECONDS it should take for the material to flow out of the viscosity cup. **This is only an approximate guide.** We suggest thinning around 25% to begin with but this may contravene the air quality control laws for your location. The solvent used for thinning is usually the solvent mentioned on the can (instructions for 'cleaning the brushes'). However, please check with the coatings manufacturer. The aim is to thin as little as possible.

Auto	18 - 20	Primers	30 - 40
Lacquers	18 - 20	Sanding Sealers	20 - 22
Enamels	20 - 25	Stains	Undiluted
Latex	20 - 30	Creosote	Undiluted
Oil-based	20 - 25	Polyurethanes	20 - 25

HVLP spraying is more friendly to the environment than most methods of spraying. It reduces appreciably the amount of unnecessary misting and fogging (overspray) associated with high-pressure spraying. Spraying with Nitrocellulose lacquer can be **hazardous. The lacquer, fumes and overspray are toxic, flammable and explosive.** If spraying must be done inside an enclosed area, **ventilate well**. Spray close to an open window or door and situate a fan to draw out the fumes (an explosion-proof motor and explosion-proof lighting will be necessary).

Please check with the Local Authority having jurisdiction on this matter.

A WORD ABOUT LATEX

Although Latex Paint was never originally intended to be sprayed, a professional finish can be achieved by following a few simple rules. (Please do not confuse latex with the newer water-based coatings). For work such as cabinetry or trim, our equipment can be used successfully with latex paint. The latex will have to be thinned with **WATER** - approximately **10-30% depending on the brand of paint.** And to improve the finish even more, you can use an additive that will slow down the drying process so that the paint levels out nicely.

The recommended air cap size setup is either the 1.5mm or 1.8mm for household trim, louver doors etc. The latex paint should be 'finish-quality' and not a cheaper grade.

When spraying latex, please adjust the Fluid Knob QTG-20 to limit the paint to a finer spray. This will increase the ratio of air to paint and result in better atomization and a beautiful finish. (Factually speaking, it doesn't increase the ratio of air to paint but does the opposite - it allows the air atomizing power to work on less paint thereby improving the quality of atomization). Also, it is usually helpful to remove the air control valve so that more air passes through the spray gun. Finally, adjust the pattern to a maximum size of 8" - 9" (20cm) - smaller is ok. Apply a wet coating (wet like a lake).

Although it is possible to use our equipment for house painting (walls), and many end users do, we feel that an airless gun or power roller is better suited for that kind of job. However, if you decide to do this kind of work, you will need the 2.0mm or 2.5mm air cap set.

GENERAL CLEANING

To clean the gun after each use, empty all paint from the cup. Use a solvent-soaked rag to clean the residue in the cup. Then, spray some clean solvent through the gun into a clean rag (to avoid filling the room with unnecessary spray) or a bucket. Repeat until the inside of the fluid passages in the gun, metal fluid tube etc are clean. Use the wet rag to wipe off the air cap and tip of the fluid nozzle.
The air cap can be soaked in thinner.

If this type of cleaning is done while the paint is still wet in the gun, it should be all that is necessary to keep the gun clean enough for next time. Do not leave liquids in the cup overnight or for long periods.

Do not restrict the fluid nozzle when cleaning (by putting your finger over the nozzle orifice) - this will drive thinned paint up the pressure tube and into the spray gun which is undesirable.

PLEASE DO NOT USE A WIRE BRUSH OR ANYTHING METAL TO CLEAN THE GUN OR CUP AS THIS WILL CAUSE DAMAGE.

DO NOT disassemble the cup assembly - threads in your cup have been sealed at the factory to prevent leakage under pressure.

The standard 1 quart (1000cc) cup can be used with most coatings (including water-based).

CAUTION | Never soak the complete spray gun in solvent as this removes the grease from the parts and distributes thinned paints throughout the air passages. It could also damage internal parts such as the spindle valve or valve seals.
It may sometimes be necessary to soak the air cap, nozzle, needle, air diffuser and air divider. **You may soak only the metal parts in solvent and clean with a soft bristle cleaning brush.** To reassemble, first oil or grease all moving and threaded parts.

CAUTION | Do not lay the gun down on its side with liquid material in it. When not in use the cup lid should not be clamped down hard as this will cause the gasket to flatten out.

CLEANING FLUID PASSAGES

To clean, flush solvent through the spray gun while the paint is still wet inside the gun. If this type of quick cleaning is performed frequently, the spray gun will function well for many years. 99% of problems with a spray gun stem from clogs in the fluid passages and (perhaps more important), the pressure tube air passages. See page 16 - NO PAINT (OR VERY LITTLE PAINT).

CLEANING BEHIND THE FLUID NOZZLE

Remove the Collar QTG-1-1 and Aircap . Using the supplied wrench, remove the Fluid Nozzle. Once the fluid nozzle is removed please be careful that the Air Baffle QTG-3 does not fall out of the gun. Use the cleaning brush and appropriate solvent to clean behind the fluid nozzle. The air cap, fluid nozzle, needle, air diffuser and air divider may be soaked in solvent. To remove the needle, remove the Fluid Knob QTG-20, Spring QTG-19 from the rear of the gun.
The needle can then be soaked and later wiped clean.

PLEASE DO NOT SOAK THE WHOLE GUN IN ANY LIQUID.
THIS IS NEVER NECESSARY OR ADVISABLE.

CLOGGED GUN - THE FLUID COUPLER

If the Fluid Coupler is clogged with dried paint it must be cleaned while in place in the gun. **The fluid coupler should not be removed.** Remove the cup assembly by loosening the nut. Use the supplied cleaning brush to unclog the inside of the fluid coupler using solvent. Replace the cup. Before tightening, position the cup to the preferred position and tighten the nut.

ACHIEVING THE DESIRED FINISH

ORANGE PEEL

If the finish is rough and resembles orange peel then the material is too thick. (Or perhaps you have the air control valve turned down - please check that it is fully open). The 'paint' will not atomize properly and the surface will be spotty. To remedy this, add more thinner (or appropriate solvent). For fast drying products such as lacquers, you may also want to add a lacquer retarder. This will slow the drying time allowing the material to flow out and level nicely.

Retarders are available for other coatings too, such as Penetrol for oil-based paints or Floetrol for latex house paints. These products go under different names such as flow-out additives etc. Please check with the coatings manufacturer.

NOTE

With the newer water-based materials 'orange peel' is usually a result of spraying on too thick a film. **Try spraying an extremely THIN FILM, but still WET coat.** With most other coatings, orange peel is caused by material being too thick or not enough atomizing power. This is why we suggest leaving the air control valve fully open when experimenting with a new coating material, otherwise it will cause confusion. If the air control valve is fully open (or perhaps removed for latex spraying) then orange peel can only be one cause - the material is too thick and must be thinned.

GRITTY FINISH

If the material is too thin, it is likely to run or be over-atomized, producing a rough gritty finish. Try thinning the product less and spraying a wetter coat.

FISH EYES

If you are refinishing furniture or pianos, fish eyes could become a problem. The cause is usually silicone or oil from polish which has been liquefied by the paint stripper that has now soaked into the bare wood. This silicone prevents the lacquer from adhering to the wood. One way to sometimes correct this is to seal in the silicone by misting on two or three light coats of lacquer. Then spray on a regular wet coat. We **do not** recommend the use of a product known as 'Fish-Eye Drops' which is essentially liquid silicone. Silicone will only contaminate the gun even further. Anything that comes into contact with the silicone becomes contaminated - such as; rags, aprons, bench tops, gloves.

SPRAY GUN USER GUIDE

NO PAINT (OR VERY LITTLE PAINT)

The air passing through the Pressure Tube 10-2000/10-2001 to pressurize the cup is blocked. This means that either the tube itself, the check valve, or one of the two nipples are blocked. A pipe cleaner can be used for cleaning the hole in the nipple.

- Pressurizing tube and/or nipples are blocked - COMMON
- The cup is not tightened down sufficiently or the cup lid gasket is worn and leaking air
- The cup is empty
- The metal fluid tube is blocked with paint - RARE
- The fluid coupler is blocked with paint - RARE

UNEVEN SPRAY PATTERN

One of the holes in the air cap may be blocked. Or, the paint could be dirty and is partially blocking the fluid nozzle. Remove the air cap and clean by soaking in solvent and using the soft bristle brush or a rag. **NEVER** use metal objects to clean holes in the air cap.

LEAKAGE

If paint material comes out of the fluid nozzle **without** pulling the trigger.

- The needle is not seating in the fluid nozzle properly
- **The needle packing may be too tight preventing the needle from moving** - see page 18 needle packing
- Foreign matter trapped between needle and fluid nozzle
- The needle or fluid nozzle could be damaged or worn
- Loose fluid nozzle
- Wrong fluid nozzle size installed

CUP LEAKS

- Oil above and below the lever to smooth the lever action
- Change gasket/diaphragm
- Leak around nipple - use Loctite to seal
- Leak around side pins - use Loctite to seal
- Leak through lid - remove nut under lid - use Loctite

THE TRIGGER IS SLUGGISH

- The Needle Packing is too tight - see LEAKAGE FROM THE NEEDLE PACKING NUT page 19
- Bent Needle

POOR SPRAY PATTERN

- Damaged needle or nozzle
- Nozzle is clogged
- Air holes in air cap clogged
- Gun too far from surface (max. 8”/20cm)

PAINT AT THE AIR NOZZLE HOLES

- The fluid nozzle is loose and material is leaking around it - tighten with the supplied wrench
- Paint is entering the gun via pressure tube and being blown through the barrel to the air cap

GUN SPRAYS IN A PULSATING MANNER

- The needle packing has worn a little or is loose. Tighten.
- The cup is almost empty
- The cup lid is not tight - air is escaping
- The clear plastic pressure tube is leaking air - replace
- The pressure tube and/or nipple is clogged - clear or replace

EXCESSIVE OVERSPRAY

- The spray pattern size is too large for the item being sprayed
- The gun is being held too far away - should be 8” max. (20cm)
- Trigger on and off as you pass over the edges of the item
- The ‘paint’ is too thin - try thinning less
- Reduce the air by turning the air control valve to the point where overspray is minimized but the finish still looks good
- For ideal and comfortable spraying conditions, you should install an extraction fan.* If you are spraying a flammable, combustible product such as nitro cellulose lacquer, you must install an explosion-proof fan

Please check with the Local Authority having jurisdiction on this matter.

LEAKAGE FROM THE NOZZLE

This occurs when the Needle Packing Nut QTG-26 is **too tight** compressing the Needle Packing QTG-25 too tightly around the needle.

Half fill the cup with water. Attach the gun to the hose and turn on the turbine blower to pressurize the cup. Pull the trigger and release. Check the nozzle for water spurting out.

Use the supplied wrench to **GENTLY** loosen the nut (1 or 2 degrees only at a time). **This is a very sensitive adjustment.** Again pull the trigger and release. Wipe away the water in between adjustments. Repeat until no water is seen at the nozzle hole.

LEAKAGE FROM THE NEEDLE PACKING NUT

This occurs when the needle packing nut is **too loose**.

Half fill the cup with water. Attach the gun to the hose and turn on the turbine blower to pressurize the cup. Use the supplied wrench to **GENTLY** tighten the needle packing nut 1 or 2 degrees only. **This is a very sensitive adjustment.** Wipe away the water in between adjustments.

Repeat until no water is seen where the needle passes through the Needle Packing Nut QTG-26.

It is a good idea to apply light machine oil or Vaseline to the needle shaft where it passes through the needle packing nut and work it in and out by pulling the trigger back and forth. This will lubricate the Needle Packing QTG-25.

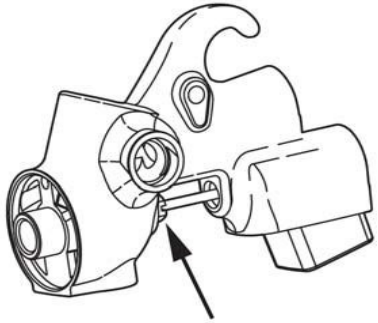

Needle Packing Nut

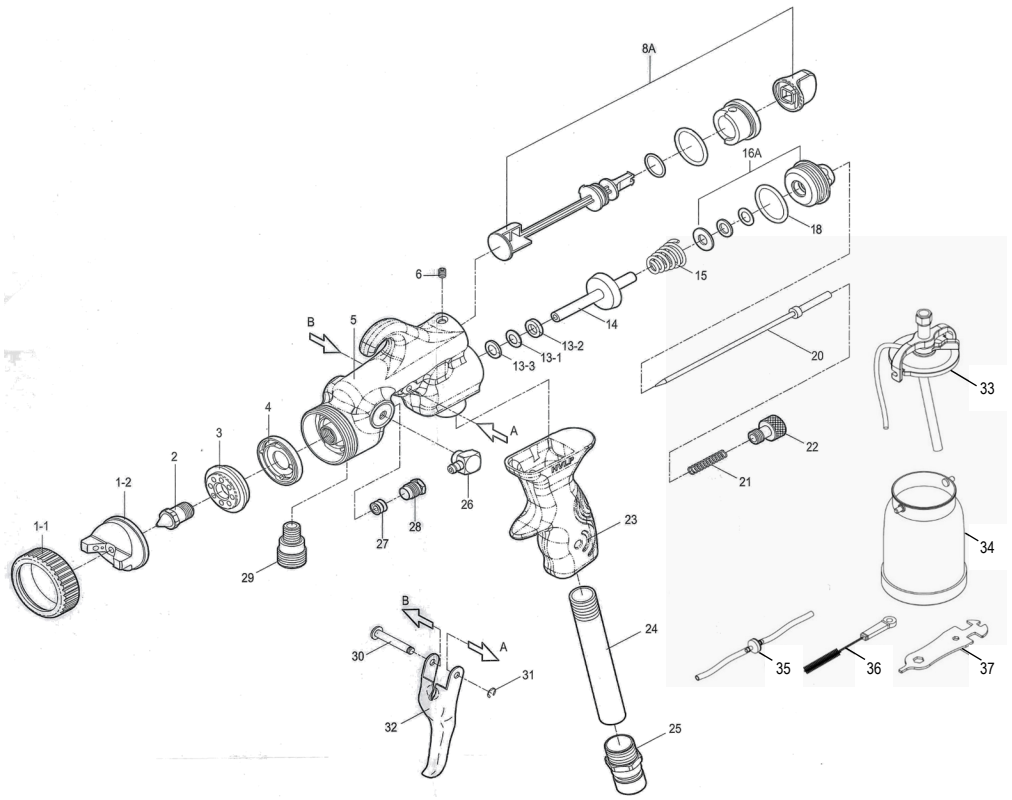

ITEM	SKU	DESCRIPTION	ITEM	SKU	DESCRIPTION
1-1	QTG-1-1	Air Cap Retaining Ring	22	QTG-20	Fluid Control Knob
1-2	#	Air Cap	23	QTG-21	Grip
2	#	Fluid Nozzle	24	QTG-22	Air Pipe
3	QTG-3	Baffle (Aluminium)	25	QTG-23	Air Inlet Nipple
4	QTG-4-1	Airflow Spacer	26	QTG-24	Vent Nipple
5	QTG-4	Gun Body	27	QTG-25	Packing
6	QTG-5	Socket Cap Screw	28	QTG-26	Packing Nut
8A	QTG-6	Pattern Adjustor Assembly	29	QTG-27	Fluid Inlet
13-1	QTG-11-2	Gasket	30	QTG-28	Trigger Stud
13-2	QTG-11-3	Gasket	31	QTG-29	E-Clip
13-3	QTG-11-1	Washer	32	QTG-30	Trigger
14	QTG-12	Needle Spindle	33	QTG-31	Cup Latch Assembly
15	QTG-13	Spring	34	QTG-32	Paint Cup
16A	QTG-14A	Needle Seal Assembly	35	QTG-33	Vent Tube Assembly
18	QTG-16	O-Ring	36	QTG-34	Cleaning Brush
20	#	Needle Assembly	37	QTG-35	Multi-Purpose Wrench
21	QTG-19	Needle Spring	#	QTG-1-xx	Needle/Nozzle Aircap Set

Refer to p.10 for full range of sizes

TURBINE CARE & MAINTENANCE

FILTERS

It is important to clean or replace the filters regularly. Operating the turbine unit with clogged or dirty filters will cause the turbine to overheat and result in premature failure. QTech3 have either one or two filters. To remove, simply pull the filters out from filter enclosure. Wash in warm soapy water and dry before replacing.

All QTech filters are a friction fit. The filter must fill the entire filter enclosure. **Cleaning your filters regularly is essential to maintaining your QTech3. It is always a good idea to have a spare pair of filters on hand.**

Re-order number for filter: 10-2049 (pack 2)

IMPORTANT NOTE

All QTech3 units are designed for intermittent use. When taking a break between coats or stepping aside to refill your cup, it's good practice to turn the machine off during this time. This allows it to cool off.

When spraying, always ensure that the turbine unit is at least 5.0m (15 feet) away from spray project and in a well ventilated area. This will prevent any overspray or debris being ingested into the turbine. Failure to do this may cause the filters to clog, resulting in damage to the internal motor.

If you experience a problem with your turbine unit, please **DO NOT** try to open and service the turbine yourself. Contact your local QTech dealer or sales representative for technical assistance. If it is an issue of no power, check your power outlet. Also, try re-setting the breaker on the back of the turbine by pressing it once.

GUN HOLDER & HANDLE BAR

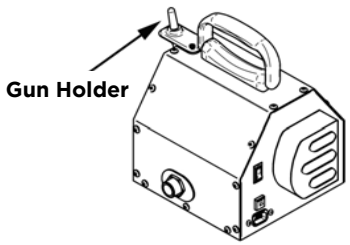

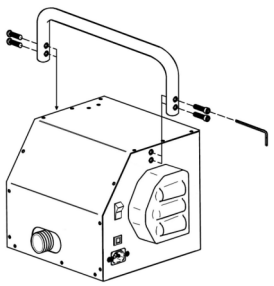

GUN HOLDER INSTALLATION

The two holes on the top of the holder require the two machine screws and washers. These screws fit into threaded inserts in the metal case.
Do not over tighten - snug is fine.

The single silver-colored screw must be installed to the single hole on the side of the gun holder. Once again, please do not over tighten this screw - snug is fine.

If you do not intend on using the gun holder you may insert the appropriate screws (as mentioned above) to block the holes.

TURBINE HANDLE BAR INSTALLATION

Included in the box is an Allen key with four black screws and handle bar. Carefully position and align the handle bar over the four holes - two on each side of the turbine case. Using the Allen key, secure the screws through the handle bar onto the turbine case.

GUN HOLDER USE

Place the Hose Connector (base of the gun handle) over the shaft of the gun holder as shown in above illustration. Please ensure it is fully set down to the base of the shaft. The spray gun will now sit stationary. The gun can be left on the holder for any length of time. It is a convenient resting place between spraying and ideal for filling the gravity cup.

HOSES

	PART	DESCRIPTION
	10-2011	Whip Hose / 6 ft / 1.8 m
	10-2048	HVLP Super Duty Air Hose / 30 ft / 9 m
33	10-2010	Quick Connect Coupling (hose to gun)
34	10-2119	Hose Seal
35	10-2003	Air Control Valve


33


34


35


34